Drawing Number – W66

Outline Number – 150A115

WESTCODE
An IXYS Company

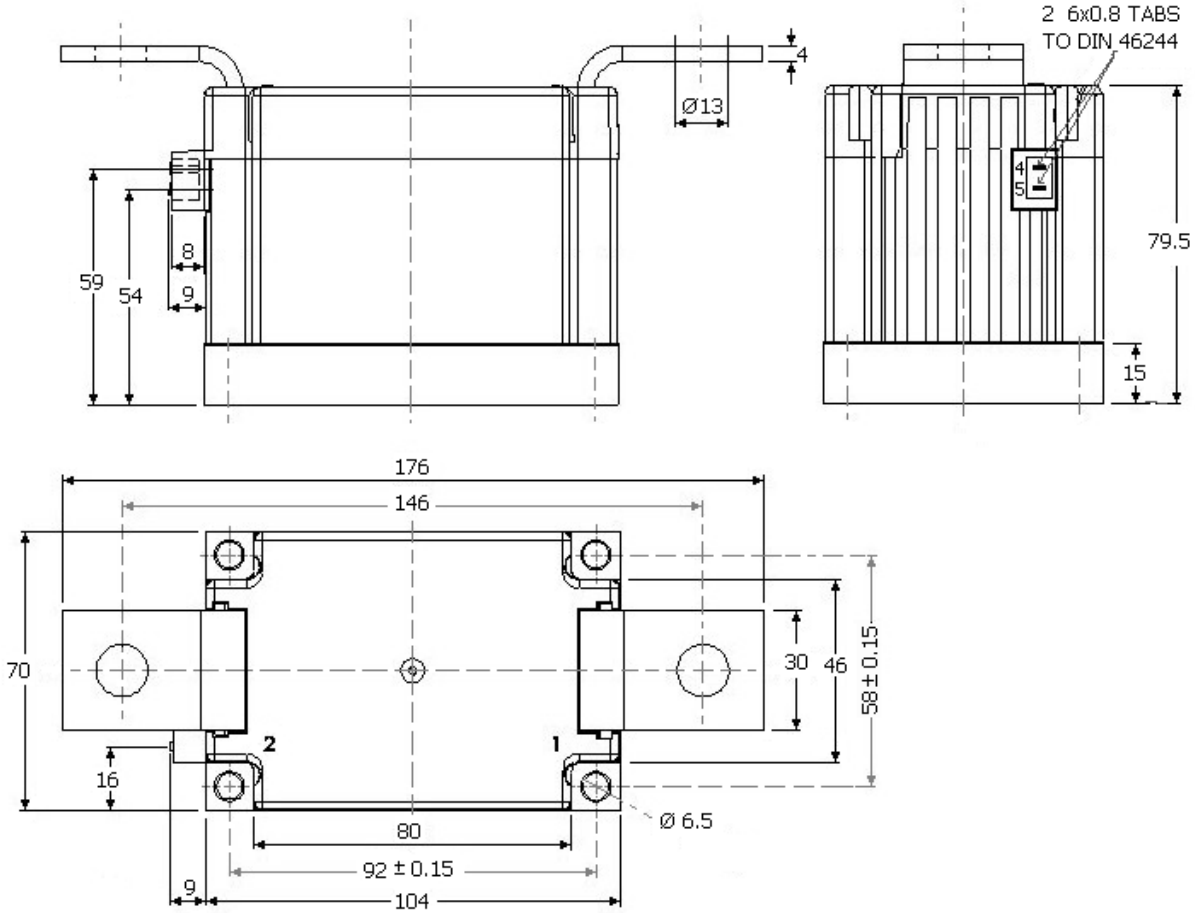

Weight 2200g

Westcode Customer Services email: wsl.sales@westcode.com **Telephone: +44 (0)1249 444524 Fax: +44 (0)1249 659448**