WESTCODE

An IXYS Company

Date:- 29 Feb, 2008

Data Sheet Issue:- 2

Rectifier Diode

Types W4096Z#340 to W4096Z#450

Old Type No.: SW34-45CXC1870

Absolute Maximum Ratings

	VOLTAGE RATINGS	MAXIMUM LIMITS	UNITS
V_{RRM}	Repetitive peak reverse voltage, (note 1)	3400-4500	V
V_{RSM}	Non-repetitive peak reverse voltage, (note 1)	3500-4600	V

	OTHER RATINGS	MAXIMUM LIMITS	UNITS
$I_{F(AV)M}$	Maximum average forward current, T_{sink}=55°C, (note 2)	4096	A
$I_{F(AV)M}$	Maximum average forward current. T_{sink}=85°C, (note 2)	3346	A
$I_{F(AV)M}$	Maximum average forward current. T_{sink}=85°C, (note 3)	2163	A
$I_{F(RMS)M}$	Nominal RMS forward current, T_{sink}=25°C, (note 2)	7460	A
$I_{F(d.c.)}$	D.C. forward current, T_{sink}=25°C, (note 4)	6801	A
I_{FSM}	Peak non-repetitive surge t_p=10ms, V_{rm}=60%V_{RRM}, (note 5)	41.7	kA
I_{FSM2}	Peak non-repetitive surge t_p=10ms, V_{rm}≤10V, (note 5)	45.9	kA
I^2t	I^2t capacity for fusing t_p=10ms, V_{rm}=60%V_{RRM}, (note 5)	8.7×10^6	A^2s
I^2t	I^2t capacity for fusing t_p=10ms, V_{rm}≤10V, (note 5)	10.5×10^6	A^2s
$T_{j\,op}$	Operating temperature range	-55 to +160	°C
T_{stg}	Storage temperature range	-55 to +160	°C

Notes:-
1) De-rating factor of 0.13% per °C is applicable for T_j below 25°C.
2) Double side cooled, single phase; 50Hz, 180° half-sinewave.
3) Single side cooled, single phase; 50Hz, 180° half-sinewave.
4) Double side cooled.
5) Half-sinewave, 160°C T_j initial.

Characteristics

	PARAMETER	MIN.	TYP.	MAX.	TEST CONDITIONS (Note 1)	UNITS
V_{FM}	Maximum peak forward voltage	-	-	1.68	I_{TM}=6000A	V
V_{FM}	Maximum peak forward voltage	-	-	2.9	I_{TM}=12300A	V
V_{T0}	Threshold voltage	-	-	0.73		V
r_T	Slope resistance	-	-	0.158		mΩ
I_{RRM}	Peak reverse current	-	-	200	Rated V_{RRM}	mA
I_{RRM}	Peak reverse current	-	-	200	Rated V_{RRM}, T_j=25°C	mA
Q_{rr}	Recovered charge	-	9500	-	I_{TM}=1000A, t_p=1000µs, di/dt=10A/µs, V_r=50V	µC
Q_{ra}	Recovered charge, 50% Chord	-	6000	6800		µC
I_{rr}	Reverse recovery current	-	270	-		A
t_{rr}	Reverse recovery time	-	45	-		µs
R_{thJK}	Thermal resistance, junction to heatsink	-	-	0.011	Double side cooled	K/W
		-	-	0.022	Single side cooled	K/W
F	Mounting force	27	-	47		kN
W_t	Weight	-	1.7	-	Outline Options ZC, ZT and ZY	kg
		-	1.2	-	Outline Options ZD and ZV	

Notes:-
1) Unless otherwise indicated T_j=160°C.
2) For other clamp forces, please consult factory.

Notes on rupture rated packages.
This product is available with a non-rupture rated package. For additional details on these products, please consult factory.

Notes on Ratings and Characteristics

1.0 Voltage Grade Table

Voltage Grade	V_{DRM} V_{DSM} V_{RRM} V	V_{RSM} V	V_D V_R DC V
34	3400	3500	1850
36	3600	3700	1900
38	3800	3900	1950
40	4000	4100	2000
42	4200	4300	2040
44	4400	4500	2080
45	4500	4600	2120

2.0 Extension of Voltage Grades

This report is applicable to other voltage grades when supply has been agreed by Sales/Production.

3.0 De-rating Factor

A blocking voltage de-rating factor of 0.13%/°C is applicable to this device for T_j below 25°C.

4.0 Snubber Components

When selecting snubber components, care must be taken not to use excessively large values of snubber capacitor or excessively small values of snubber resistor. Such excessive component values may lead to device damage due to the large resultant values of snubber discharge current. If required, please consult the factory for assistance.

5.0 Computer Modelling Parameters

5.1 Device Dissipation Calculations

$$I_{AV} = \frac{-V_{T0} + \sqrt{V_{T0}^{\ 2} + 4 \cdot ff^2 \cdot r_T \cdot W_{AV}}}{2 \cdot ff^2 \cdot r_T}$$

and:

$$W_{AV} = \frac{\Delta T}{R_{th}}$$

$$\Delta T = T_{j\max} - T_K$$

Where V_{T0}=0.826V, r_T=0.104mΩ,

R_{th} = Supplementary thermal impedance, see table below and

ff = Form factor, see table below.

Supplementary Thermal Impedance				
Conduction Angle	6 phase (60°)	3 phase (120°)	½ wave (180°)	d.c.
Square wave Double Side Cooled	0.0144	0.0132	0.0126	0.0116
Square wave Single Side Cooled	0.0262	0.0251	0.0244	0.0235
Sine wave Double Side Cooled	0.0133	0.0124	0.0115	
Sine wave Single Side Cooled	0.0253	0.0244	0.0234	

Form Factors				
Conduction Angle	6 phase (60°)	3 phase (120°)	½ wave (180°)	d.c.
Square wave	2.449	1.732	1.414	1
Sine wave	2.778	1.879	1.57	

5.2 Calculating V_F using ABCD Coefficients

The on-state characteristic I_F vs. V_F, on page 6 is represented in two ways;

(i) the well established V_{T0} and r_T tangent used for rating purposes and

(ii) a set of constants A, B, C, D, forming the coefficients of the representative equation for V_F in terms of I_F given below:

$$V_F = A + B \cdot \ln(I_F) + C \cdot I_F + D \cdot \sqrt{I_F}$$

The constants, derived by curve fitting software, are given below for both hot and cold characteristics. The resulting values for V_F agree with the true device characteristic over a current range, which is limited to that plotted.

	25°C Coefficients	160°C Coefficients
A	0.61079656	0.615582755
B	0.0234119	-0.02994657
C	6.6199×10^{-5}	6.917×10^{-5}
D	3.72241×10^{-3}	0.01174699

5.3 D.C. Thermal Impedance Calculation

$$r_t = \sum_{p=1}^{p=n} r_p \cdot \left(1 - e^{\frac{-t}{\tau_p}}\right)$$

Where *p = 1* to *n, n* is the number of terms in the series and:

t = Duration of heating pulse in seconds.
r_t = Thermal resistance at time t.
r_p = Amplitude of p_{th} term.
τ_p = Time Constant of r_{th} term.

The coefficients for this device are shown in the tables below:

D.C. Single Side Cooled				
Term	1	2	3	4
r_p	0.01551	2.7827×10^{-3}	4.2105×10^{-3}	0.9443×10^{-3}
τ_p	10.04275	1.783567	0.2231307	3.428×10^{-3}

D.C. Double Side Cooled					
Term	1	2	3	4	5
r_p	6.4176×10^{-3}	2.7472×10^{-3}	1.2515×10^{-3}	0.6336×10^{-3}	0.59597×10^{-3}
τ_p	1.785337	0.34595	0.099651	0.014214	2.298151×10^{-3}

6.0 Reverse recovery ratings

(i) Q_{ra} is based on 50% I_{rm} chord as shown in Fig. 1

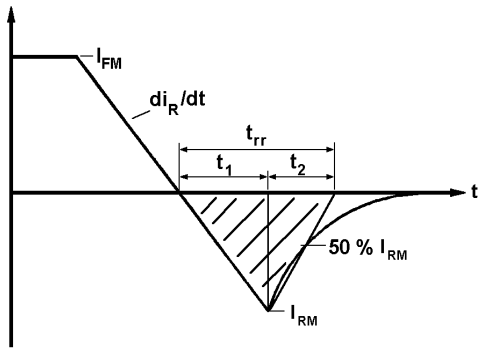

Fig. 1

(ii) Q_{rr} is based on a 150µs integration time i.e.

$$Q_{rr} = \int_0^{150\mu s} i_{rr}.dt$$

(iii)

$$K\ Factor = \frac{t_1}{t_2}$$

Curves

Figure 1 - Forward characteristics of Limit device

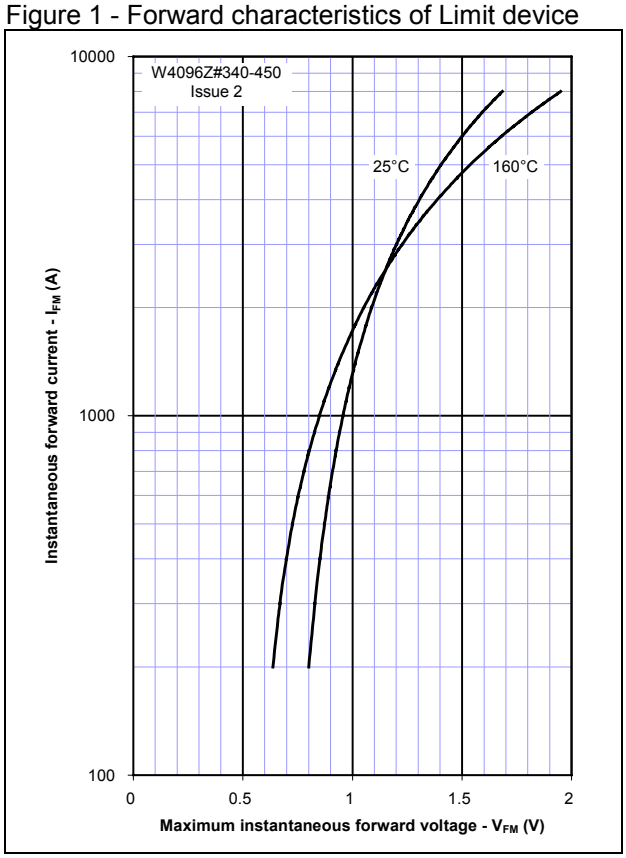

Figure 2 - Transient thermal impedance

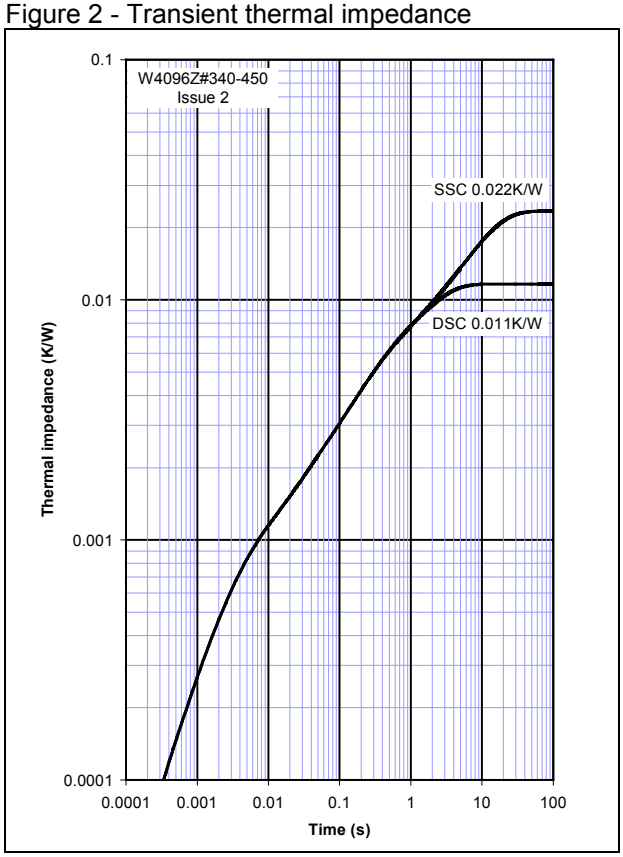

Figure 3 - Maximum surge Rating

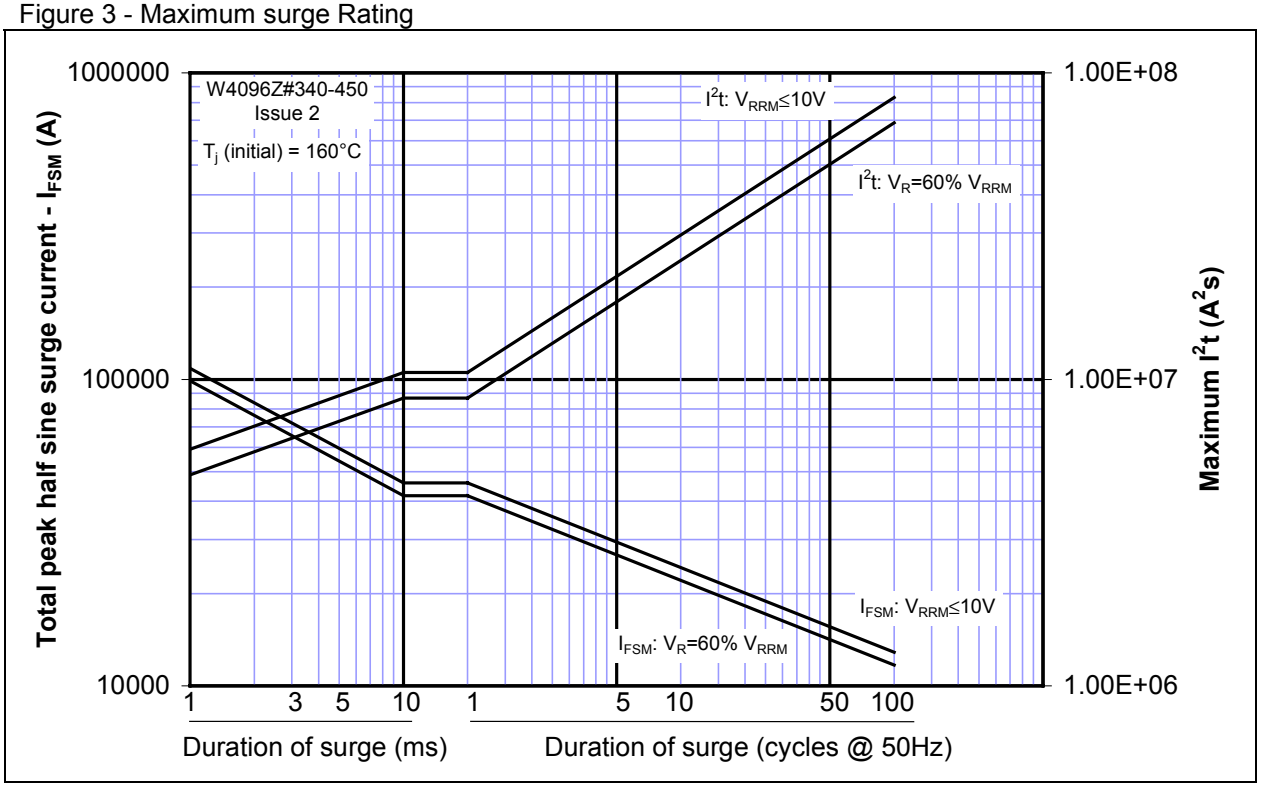

Figure 4 - Total recovered charge, Q_{rr}

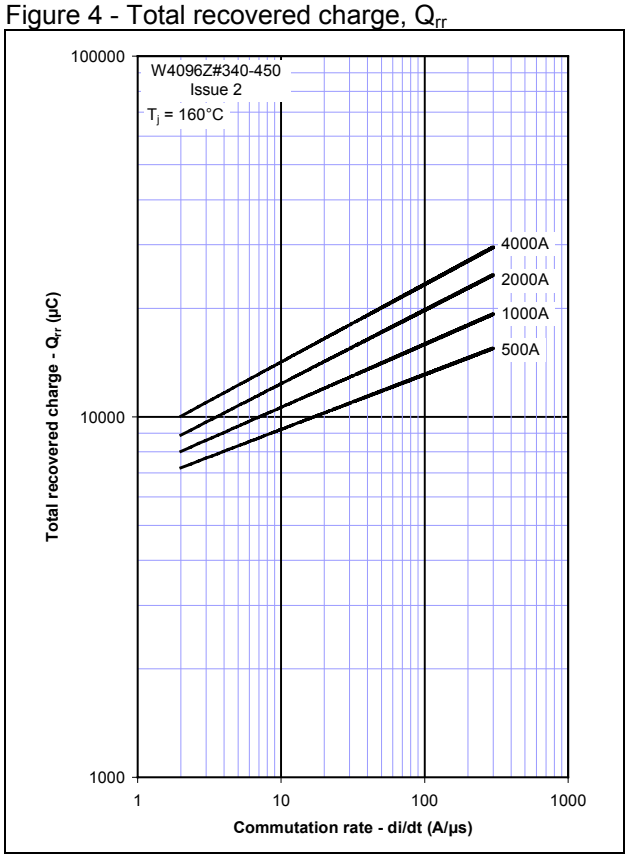

Figure 5 - Recovered charge, Q_{ra} (50% chord)

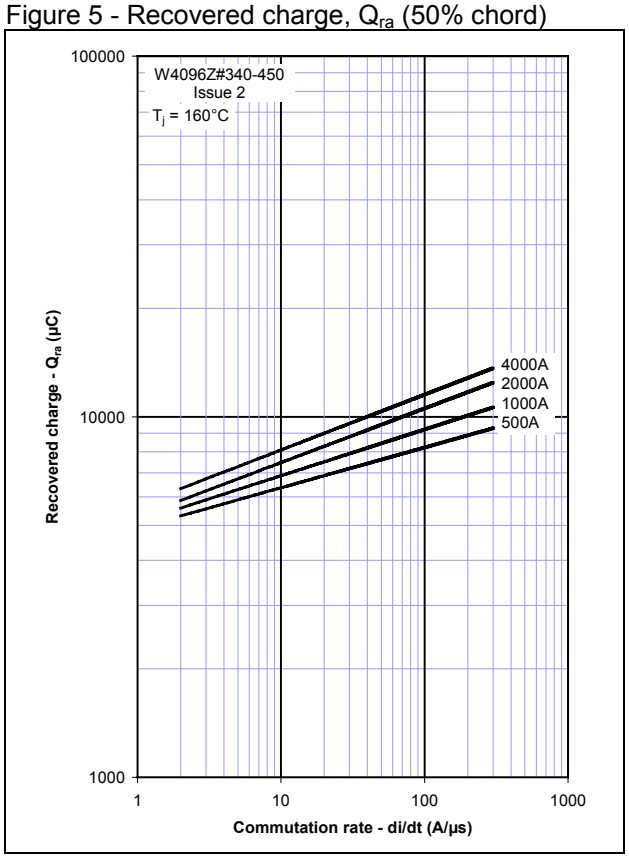

Figure 6 - Peak reverse recovery current, I_{rm}

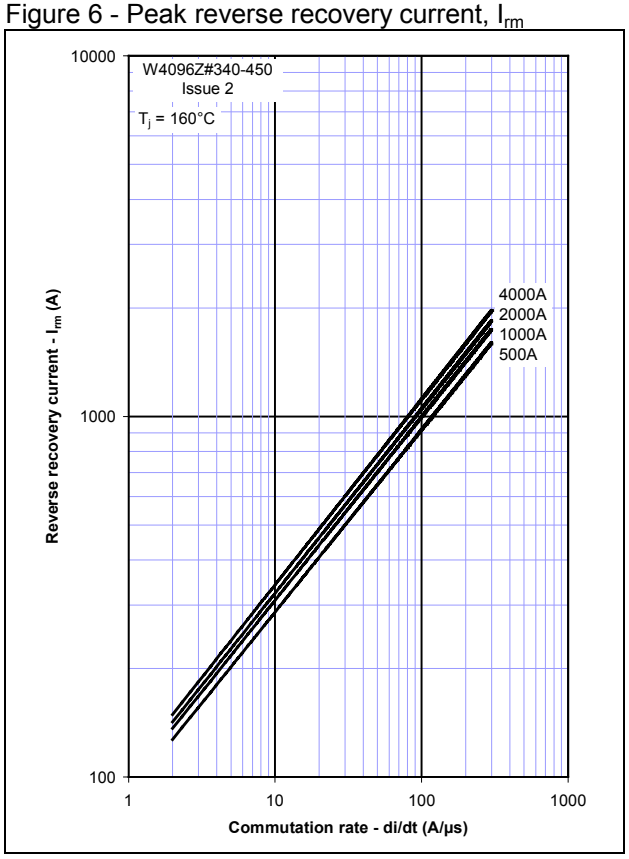

Figure 7 - Maximum recovery time, t_{rr} (50% chord)

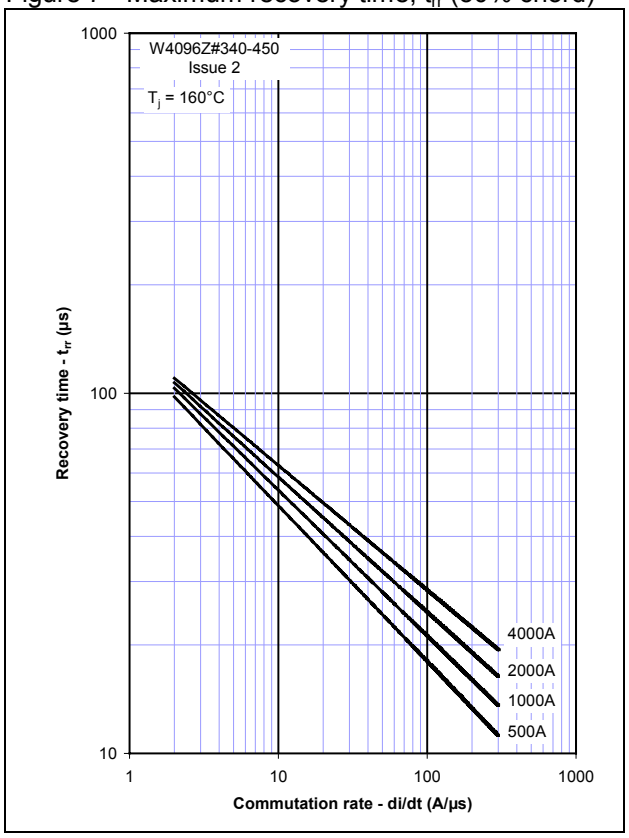

Figure 8 – Forward current vs. Power dissipation – Double Side Cooled

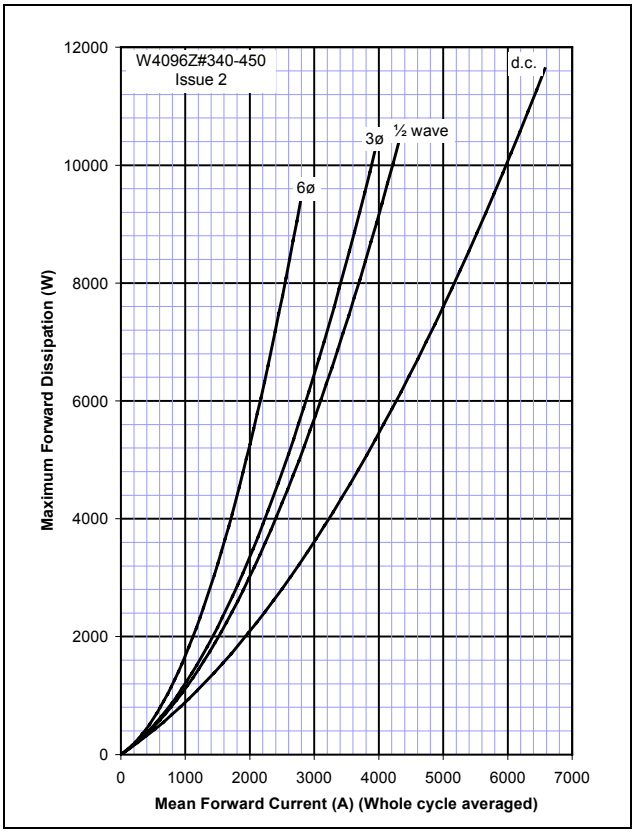

Figure 9 – Forward current vs. Heatsink temperature - Double Side Cooled

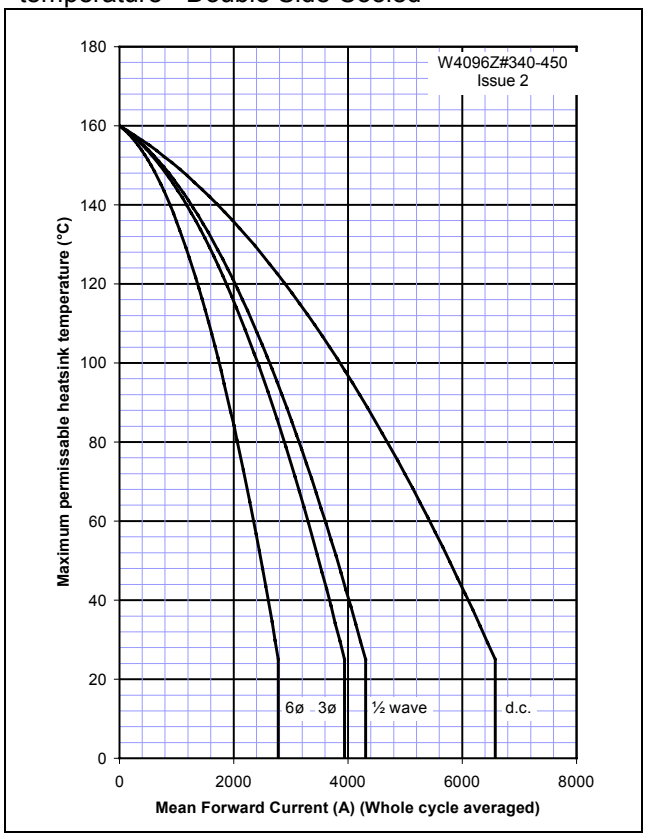

Figure 10 – Forward current vs. Power dissipation – Single Side Cooled

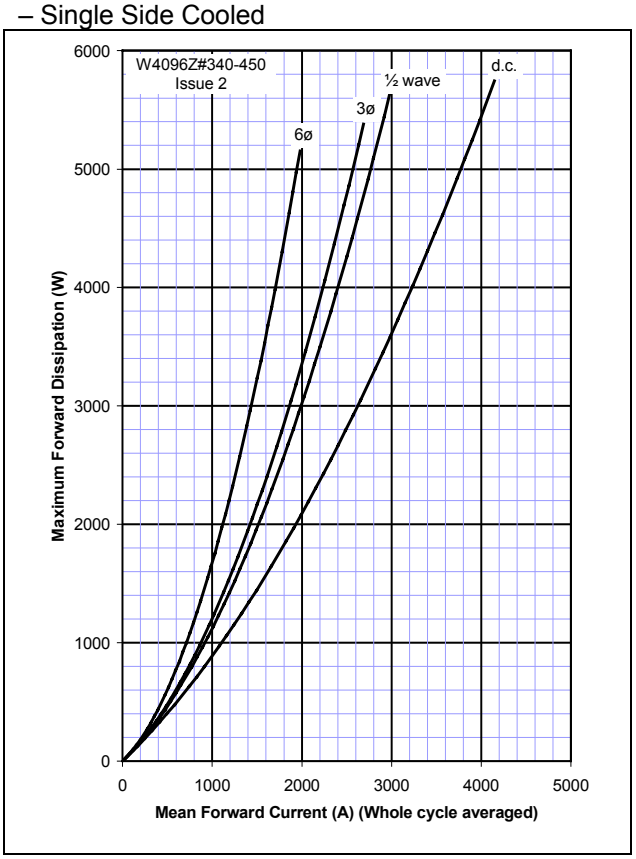

Figure 11 – Forward current vs. Heatsink temperature – Single Side Cooled

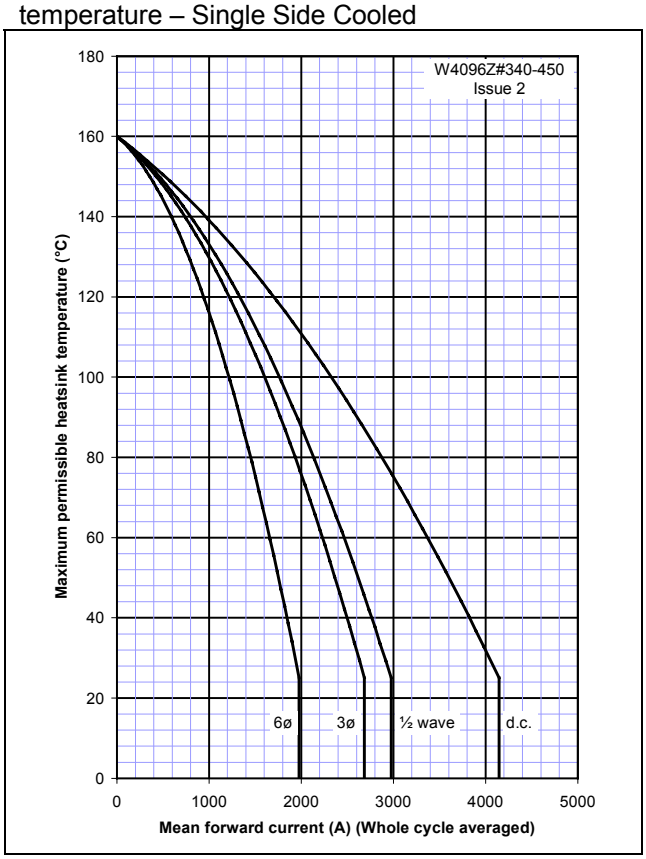

Outline Drawing & Ordering Information

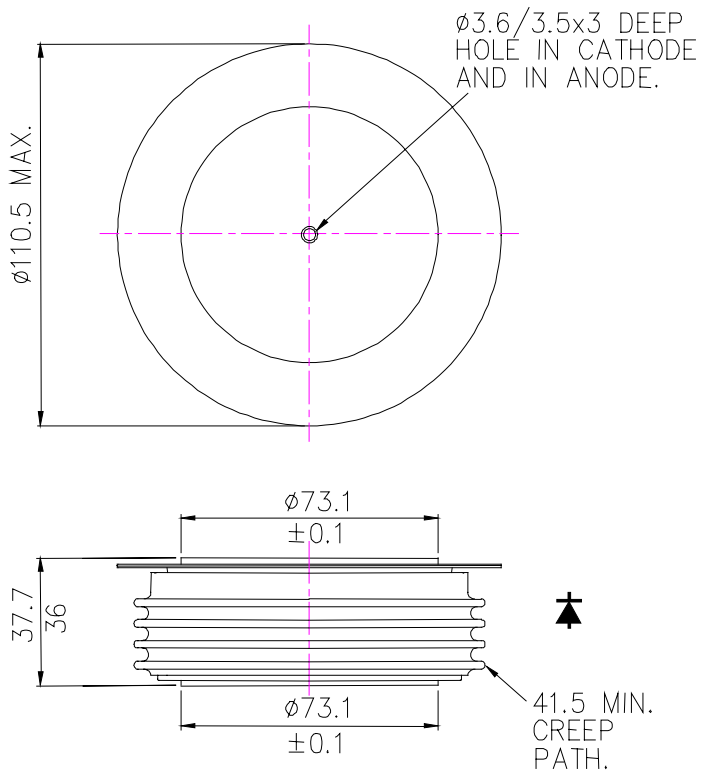

Outline options ZC, ZT and ZY

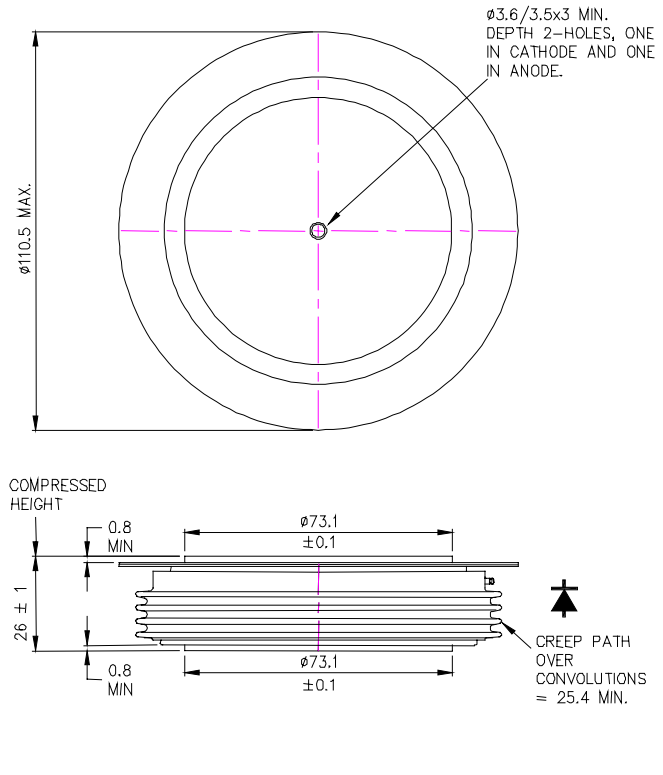

Outline options ZD and ZV

ORDERING INFORMATION (Please quote 10 digit code as below)

W4096	Z#	♦♦	0
Fixed Type Code	Fixed outline code ZC = 37.7mm Clamp height, ZT = 37.7mm rupture rated capsule, ZY = 37.7mm extended rupture rated capsule ZD = 26mm Clamp height, ZV = 26mm rupture rated capsule	Voltage code $V_{RRM}/100$ 34-45	Fixed turn-off time code

Order code: W4096ZC380 – 3800V V_{RRM}, 37.7mm clamp height capsule.

IXYS Semiconductor GmbH
Edisonstraße 15
D-68623 Lampertheim
Tel: +49 6206 503-0
Fax: +49 6206 503-627
E-mail: marcom@ixys.de

IXYS Corporation
3540 Bassett Street
Santa Clara CA 95054 USA
Tel: +1 (408) 982 0700
Fax: +1 (408) 496 0670
E-mail: sales@ixys.net

WESTCODE
An IXYS Company

www.westcode.com

www.ixys.com

Westcode Semiconductors Ltd
Langley Park Way, Langley Park,
Chippenham, Wiltshire, SN15 1GE.
Tel: +44 (0)1249 444524
Fax: +44 (0)1249 659448
E-mail: WSL.sales@westcode.com

IXYS Long Beach
3270 Cherry Avenue
Long Beach CA 90807 USA
Tel: +1 (562) 595 6971
Fax: +1 (562) 595 8182
E-mail: WSI.sales@westcode.com

The information contained herein is confidential and is protected by Copyright. The information may not be used or disclosed except with the written permission of and in the manner permitted by the proprietors Westcode Semiconductors Ltd.

© Westcode Semiconductors Ltd.

In the interest of product improvement, Westcode reserves the right to change specifications at any time without prior notice.

Devices with a suffix code (2-letter, 3-letter or letter/digit/letter combination) added to their generic code are not necessarily subject to the conditions and limits contained in this report.